# QZX

The Journal Covering Amateur Radio and Sinclair Computers
ZX80; Micro-Ace; ZX81; TS1000, 1500, and 2068; QL; Z88
Alex. F. Burr, K5XY, Publisher
2025 O'Donnell Drive
Las Cruces, NM
88001

Volume 11 Number 11 ($1.50 / issue) 1993 October

* EDITOR'S NOTES K5XY
* SINCLAIR PUZZLE SOLUTION K5XY
* ZX81 BLOCK DIAGRAM
* ZX81 KEYBOARD AND POWER SUPPLY

## EDITOR'S NOTES

K5XY

It is hard to get QZX caught up. I am now traveling around a bit, which makes it even harder. I had prepared the last issue in Las Cruces and took it with me to San Diego to be copied and mailed. Unfortunately someplace between the computer printer and the Xerox shop in San Diego it disappeared, never to be found again. Fortunately it was still in the computer in Las Cruces, so when I returned I put it together again, printed it, and had it mailed after I left once more. This issue was supposed to be put together on my next visit home, but unscheduled events postponed that. I have the next several issues blocked out so, although I am still traveling, the issues should come with more frequency (about 14 MHz instead of 7, I guess).

While I was in San Diego, I visited a surplus store which had a few computer related items. They had nice small TV monitors about one foot in each dimension for $20. These would be very good for our computers using one of the circuits which have been published in QZX (see, for instance, July 1986) for monitor connections. They had a wide assortment of keyboards, mostly for MSDOS type computers, but some suitable for Sinclairs. There were a few other items for the Commodore 64 and lots of Apple IIe boards but no additional Sinclair items.

On Saturday, May 14 the second annual North American QL/QDOS get-together will be held in Newport, Rhode Island. Last year the biggest complaint against the show was that it was too short. The list of vendors who have said they will be there exceeds seven from both sides of the Atlantic. Several others have expressed interest. For more information contact Bob Dyl at (404) 849-3805. I have no mail address at this time, but you could write to Update Magazine at Box 1095. Peru, IN 46970. Update, by the way, is having a special sale of back issues which ends in March. That magazine is a large quarterly filled with real information about our computers.

## UNCLASSIFIED ADS

WANTED: UNCLASSIFIED ADS for publication in QZX. Cost is 1 cent for each keystroke (characters, blanks, etc.). Payment must be included with order. This is an excellent way to sell your program or unwanted equipment, ask for help, or find a specific program. Send your ad with payment to QZX, 2025 O'Donnell, Las Cruces, NM 88001.

FOR SALE: PC-DRAW a printed circuit designer for the TS2068. See review in QZX for 1988 May. $9.00 postpaid. A. F. Burr, 2025 O'Donnell, Las Cruces, NM 88001.

FOR SALE: QZX Index. 59 pages. $10 post paid. A. B. Burr, 2025 O'Donnell, Las Cruces, NM 88001.

# SINCLAIR PUZZLE SOLUTION

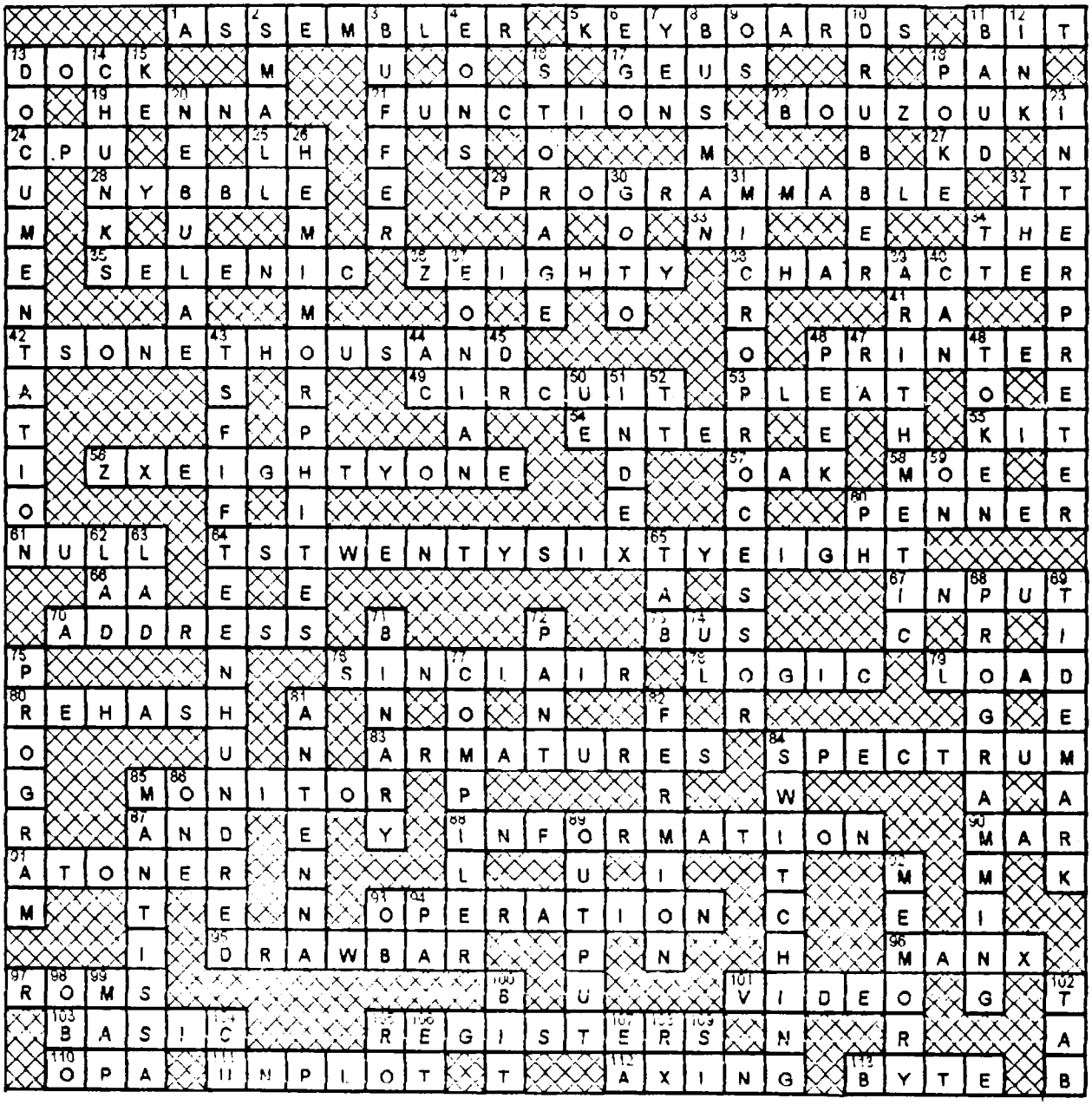

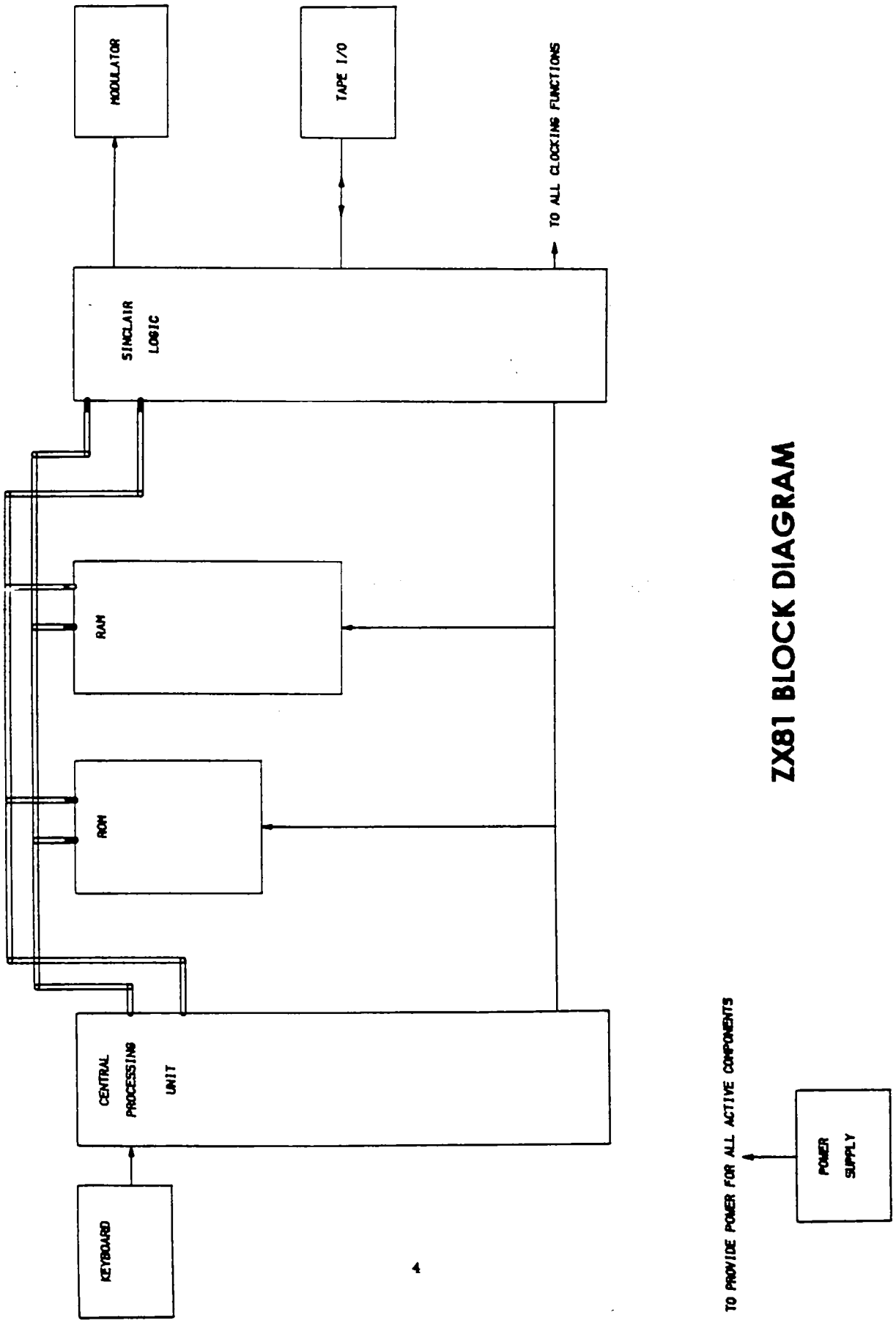


ZX81 BLOCK DIAGRAM

# ZX81 KEYBOARD AND POWER SUPPY

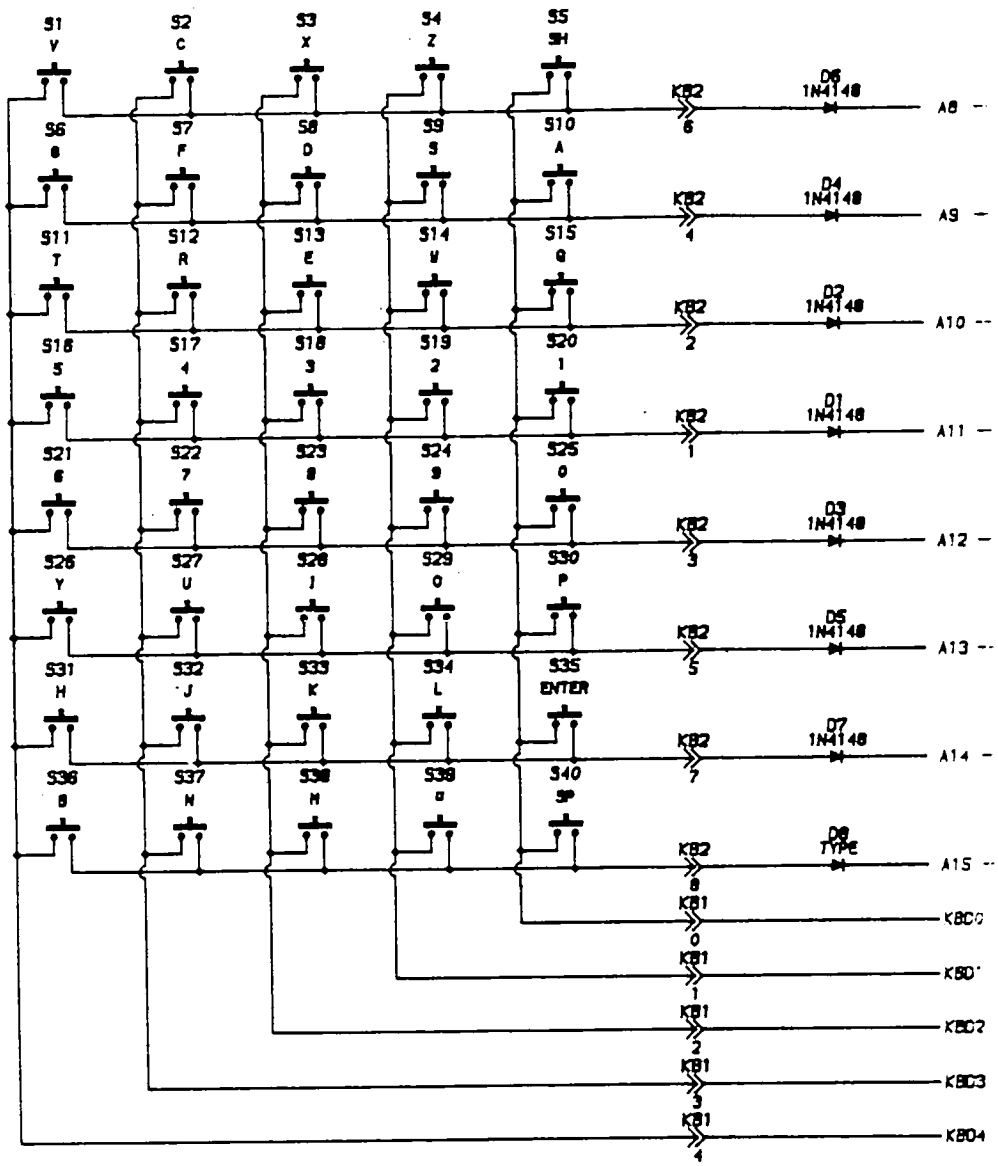


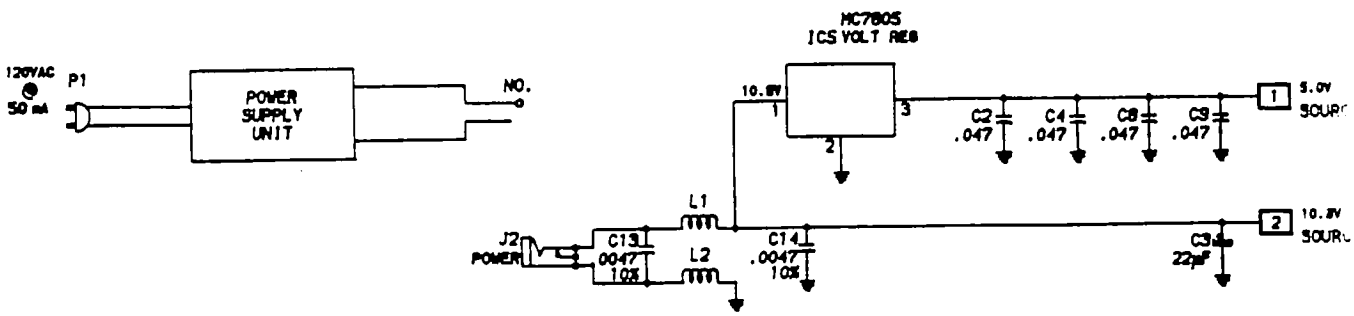

73, K5XY

QZX presents the best software and hardware projects available for the radio amateur. While the contents are believed to be accurate, no warranty is extended on any program or project. No investigation has been made of the claims or reputation of any advertiser. It would be greatly appreciated if all correspondence requiring an answer would be accompanied by a self-addressed stamped envelope (SASE). Copyright by QZX, 1993. All rights reserved, photocopying by permission only
ISSN 1055-1735

Please send me QZX for one year, starting immediately. Enclosed is $15.00 for twelve issues. (Those with addresses not in Canada, the US, or Mexico send $25.00 in US funds for air mail delivery.) Thanks. (93/10)

Name _____

Call _____

Address _____

City _____

State ____ Zip _____

Country _____

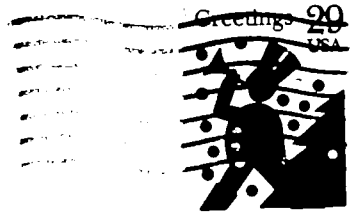


**QZX Journal**
**2025 O'Donnell Drive**
**Las Cruces, NM 88001**

**FIRST CLASS**

W*9CAT EXCH
BOB SWOGER
CATUG
613 PARKSIDE CIRCLE
STREAMWOOD, IL 60107